B7.1 TEAM KIT B7.1D TEAM KIT

Driver: Zak Smith | Event: Hudy Rd 2 | Qualification: 4th | Main: A

Date: 07/11/26 | Track: Wheelspin | Finish: 3rd | Best Lap Time: 12.3

Front Suspension

- Ride Height: 12mm
- Camber: -1
- Toe: 0.5 out
- Anti-Roll Bar: 0.9
- Arm Type: Carbon
- Tower Type: Hall -2
- Wheel Hex: 5mm
- Steering Block: 0 kpi 3T
- Caster Block Insert: 0 ☐ +2.5 ☑ +5 ☐
- Bulkhead Type: Aluminium
- Kick-Up Angle: -2.5 ☐ 0 ☑ +2.5 ☐
- Steering Stop Spacing: 0
- Caster Block Spacing: Fwd ☐ Back ☑
- Ballstud Mount: Standard ☐ -2mm ☑
- Notes:

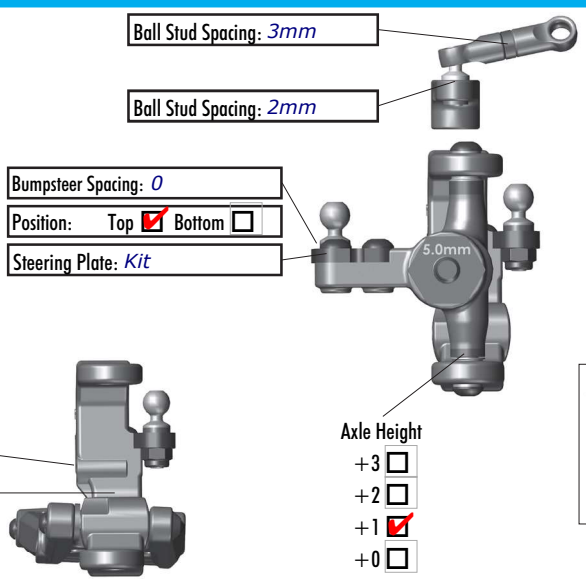

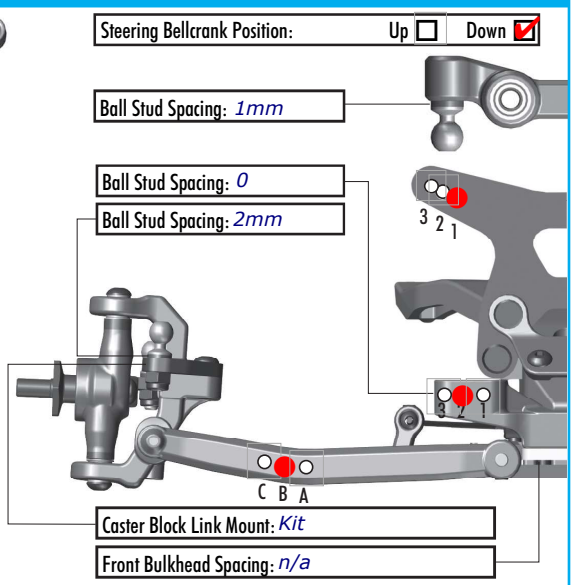

Rear Suspension

- Ride Height: 13mm
- Camber: -1
- Anti-Roll Bar: 1.3
- Arm Type: Carbon
- Tower Type: Hall -4
- Arm Spacing: Fwd ☑ Mid ☐ Back ☐
- Wheel Hex: 6mm
- Hub Type: Std ☐ HRC ☑ Carbon
- Hub Spacing: Fwd ☐ Mid ☑ Back ☐
- Drive Shaft: CVA's ☑ Universals ☐
- Notes:

C Mount

Aluminium ☑ Steel ☐

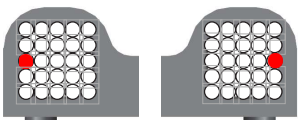

D Mount

Aluminium ☑ Steel ☐

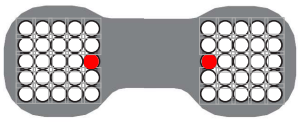

Axle Height

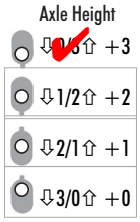

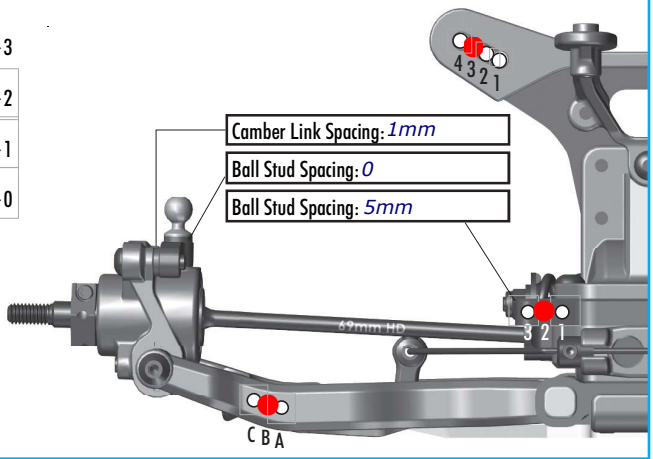

Electronics

- Radio: KO Esprit 4 | Servo: Reedy RS1606A
- EPA (%) - Throttle: 100 | Brake: 80
- ESC: Hobbywing XR10 G3
- ESC Settings:
- Motor / Wind: Reedy M4 6T | Timing: 30
- Pinion: 21 | Spur: 78
- Battery Mount: Std ☑ Offset ☐
- Back 1 ☐ 2 ☐ 3 ☐ 4 ☐ 5 ☑ Fwd
- Battery: Reedy 4800 | Weight: None
- Notes:

Drivetrain

- Differential Ball ☐ Gear ☑
- Height: 3
- Setting: 60K-2G
- Notes:

Slipper Clutch

- Type: Avid
- # of Pads: 3
- Setting: White/Red/Red
- Notes:

Shocks

	Front	Rear
Piston:	2x 1.7	2x 1.8
Thickness:	2mm	2mm
Fluid:	37.5wt	32.5wt
Spring:	Willspeed Orange	Willspeed Blue
Limiters:	In: 2mm Out:	In: 1mm Out:
Stroke:	21.5	26
Eyelet:	0	0
Cup Offset:	0 ☐ +5 ☑ +9 ☐	0 ☑ +5 ☐ +9 ☐



Kashima Bodies ☑ Chrome Shafts ☑ Machined Spacers ☑

Notes: Inverted Rear Shocks

Track Information

- Size: Small/Tight
- Composition: EOS Carpet
- Traction: Medium-High
- Moisture:
- Surface: Bumpy ☐ Smooth ☑ ☐
- Temperature:
- Notes:

Tires

- Front Tires: Splinter
- Front Compound: Yellow
- Front Insert: n/a
- Rear Tires: Cactus
- Rear Compound: Yellow
- Rear Insert: Cheater
- Wheel (F/R): AE
- Glued Front Sidewall

Body, Weight

- Body: JC F2 Light
- Front Wing: Kit
- Rear Wing: JC 6.5
- Wing Angle: 0° ☑ 3° ☐ 6° ☐
- Chassis Lenght: -4
- Servo Weights: 24g
- Electronics Weights: 11g
- Total Vehicle Weight:

Vehicle Comments

Notes: